Rev no	Revision note	Date	Created by	Approved by

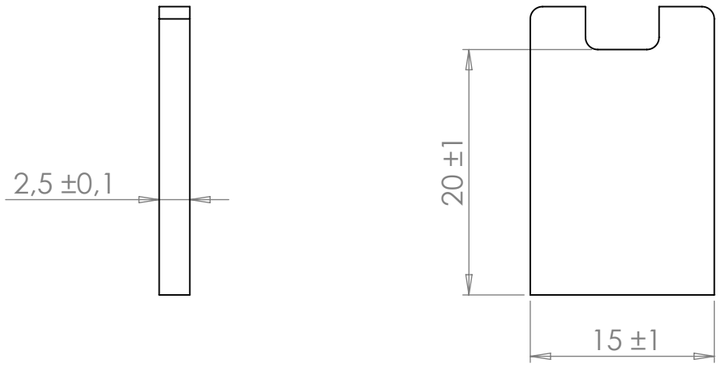

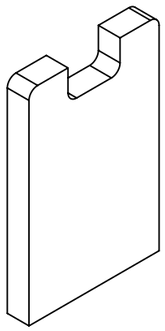

Article number	Material	Surface	Drawing number	SCALE:1:20	Sheet A3
			KR7000-110 B11-10	Date 24-04-2015	
			Description	Created by Magnus Svensson	
7300-110		Acid proof AISI 316L	Welding Bracket Flat D20	Approved by	
			Drawing and design is the copyright of Axelent Wire Tray AB and must not be copied without prior consent	WEIGHT:	
			Unless otherwise specified: Dimensions in MM		

AXELENT X-TRAY®